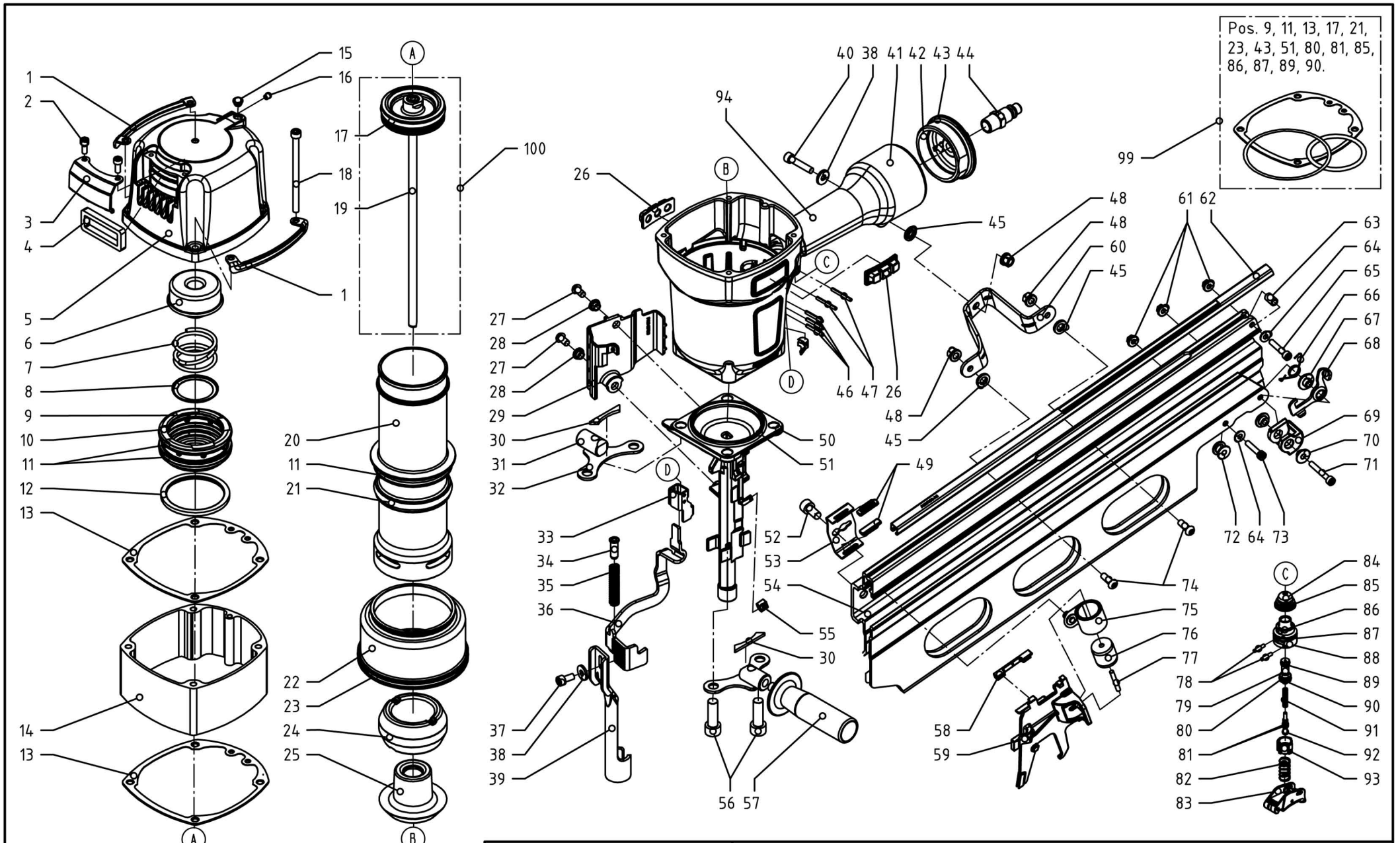


PREBENA®

# Ersatzteilliste/list of spare parts/nomenclature des pieces

| Type | 10X-RK160 | No. | 80800003 |
|---|---|---|---|

100510

| | | | | | |
|---|---|---|---|---|---|
| 100 | 80805501 | 1 | Treiber komplett | driver complete | couteau complete |
| 99 | 80839401 | 1 | Dichtungssatz | seal kit | joints kit |
| 98 | | | | | |
| 97 | | | | | |
| 96 | | | | | |
| 95 | | | | | |
| 94 | 43038601 | 1 | Gummiabdeckung, Griff | rubber cover, handle | couverture de caoutchouc |
| 93 | 81503601 | 1 | Ventilstiftführung | valve pin guide | guide de soupape |
| 92 | 80703501 | 1 | Ventilstift | valve pin | pin de soupape |
| 91 | 99619901 | 1 | Druckfeder | spring | ressort |
| 90 | 99906001 | 1 | O-Ring | o-ring | joint torique |
| 89 | 99905901 | 1 | O-Ring | o-ring | joint torique |
| 88 | 81503401 | 1 | Ventilbuchse | valve bush | douille de soupape |
| 87 | 99906201 | 1 | O-Ring | o-ring | joint torique |
| 86 | 99924601 | 1 | O-Ring | o-ring | joint torique |
| 85 | 99924401 | 1 | O-Ring | o-ring | joint torique |
| 84 | 81510101 | 1 | Ventilstangenführung | valve tube guide | guide de soupape |
| 83 | 80705401 | 1 | Auslösehebel | trigger | levier de détente |
| 82 | 99616501 | 1 | Druckfeder | spring | ressort |
| 81 | 99924501 | 2 | O-Ring | o-ring | joint torique |
| 80 | 99924701 | 1 | O-Ring | o-ring | joint torique |
| 79 | 81503301 | 1 | Ventilstange | valve tube | tige de soupape |
| 78 | 98902306 | 2 | Zylinderstift | parallel pin | goupille celindrique |
| 77 | 80814001 | 1 | Achse, Federlager | axle, spring holder | axe, fixation de ressort |
| 76 | 80814101 | 1 | Federlager | spring holder | fixation de ressort |
| 75 | 99405501 | 1 | Rollenfeder | roll spring | ressort |
| 74 | 99307008 | 2 | Linsenschraube | screw | vis |
| 73 | 99304402 | 1 | Zylinderschraube | screw | vis |
| 72 | 80731601 | 1 | Distanzbuchse | distance sleeve | douille de distance |
| 71 | 99304602 | 1 | Zylinderschraube | screw | vis |
| 70 | 80705901 | 2 | Buchse | sleeve | douille |
| 69 | 80738101 | 1 | Schutz, Magazin | protection, magazine | protection de magasin |
| 68 | 80802501 | 1 | Sperrklinke | stopper | cliquet |
| 67 | 80714201 | 1 | Distanzscheibe | distance disk | disque |
| 66 | 99405001 | 1 | Schenkelfeder | leg spring | ressort |
| 65 | 99333702 | 1 | Zylinderschraube | screw | vis |
| 64 | 99100301 | 2 | Scheibe | washer | rondelle |
| 63 | 80808501 | 1 | Distanzhülse | distance sleeve | douille de distance |
| 62 | 80804301 | 1 | Führungsschiene | guide rail | rail de guidage |
| 61 | 51411401 | 3 | Mutter | nut | écrou |
| 60 | 80804001 | 1 | Magazinhalter | holder, magazine | fixation de magasin |
| 59 | 80802301 | 1 | Vorschieber | pusher | chariot |
| 58 | 80813401 | 1 | Führungsklötzchen, Vorschieber | guide block, pusher | pièce de guidage, chariot |
| 57 | 98248801 | 1 | Handgriff | handle | manette |
| 56 | 99311802 | 4 | Zylinderschraube | screw | vis |
| 55 | 80727001 | 1 | Befestigungselement | fastening element | élément de fixation |
| 54 | 80801901 | 1 | Magazin | magazine | magasin |
| 53 | 80803201 | 1 | Federsitz | spring holder | fixation de ressort |
| 52 | 99309002 | 1 | Zylinderschraube | screw | vis |
| 51 | 99924901 | 1 | O-Ring | o-ring | joint torique |
| Pos. | ET-Nr. | Menge | Beschreibung | description | dénomination |



| | | | | | |
|---|---|---|---|---|---|
| 50 | 80812001 | 1 | Gehäuseboden | base, gun body | fond de corp |
| 49 | 80837001 | 2 | Distanzleiste | distance ledge | liteau de distance |
| 48 | 70511401 | 3 | Mutter | nut | écrou |
| 47 | 98904403 | 2 | Spannhülse | spring pin | goupille élastique |
| 46 | 98904203 | 3 | Spannhülse | spring pin | goupille élastique |
| 45 | 80808401 | 3 | Dämpfungsring | absorption ring | anneau d'amortissement |
| 44 | 98800101 | 1 | Einstecknippel | nipple | raccord à vis |
| 43 | 99924801 | 1 | O-Ring | o-ring | joint torique |
| 42 | 98859201 | 1 | Reduzierung | reducer | adapter |
| 41 | 80702701 | 1 | Gehäuse | gun body | corps |
| 40 | 99307002 | 1 | Zylinderschraube | screw | vis |
| 39 | 80821701 | 1 | Sicherungsbügel, unten | lower safety device | palpeur de sécurité, en bas |
| 38 | 99100303 | 2 | Scheibe | washer | rondelle |
| 37 | 99306302 | 1 | Zylinderschraube | screw | vis |
| 36 | 80701401 | 1 | Sicherungsbügel | safety device | palpeur de sécurité |
| 35 | 99622101 | 1 | Druckfeder | spring | ressort |
| 34 | 80705301 | 1 | Federlager | spring support | support de ressort |
| 33 | 81501101 | 1 | Führung, Sicherungsbügel | guide, safety device | guidage de sécurité |
| 32 | 80736701 | 2 | Griffaufnahme | handle base | fond de manette |
| 31 | 80737801 | 2 | Griffbefestigung | handle fastening | fixation de manette |
| 30 | 80701801 | 2 | Distanzstück | distance part | distance |
| 29 | 80732001 | 1 | Schutzabdeckung | safety cover | guide de soupape |
| 28 | 80705001 | 2 | Bundhülse | collar bush | douille à bride |
| 27 | 99303308 | 2 | Linsenschraube | screw | vis |
| 26 | 80727201 | 2 | Schutz | protection | protection |
| 25 | 81520301 | 1 | Puffer (innen) | bumper (inside) | amortisseur (interieur) |
| 24 | 81501001 | 1 | Puffer | bumper | amortisseur |
| 23 | 99924201 | 1 | O-Ring | o-ring | joint torique |
| 22 | 80811701 | 1 | Distanzring | distance ring | collier de d´écartement |
| 21 | 99924301 | 1 | O-Ring | o-ring | joint torique |
| 20 | 80800901 | 1 | Zylinder | cylinder | cylindre |
| 19 | 80800801 | 1 | Treiber mit Kolben | driver incl. piston | couteau incl. piston |
| 18 | 99334102 | 4 | Zylinderschraube | screw | vis |
| 17 | 99924101 | 1 | O-Ring | o-ring | joint torique |
| 16 | 99302003 | 1 | Gewindestift | set screw | vis sans tête |
| 15 | 52920701 | 1 | Verschlußstopfen | stopper | fermeture |
| 14 | 80802801 | 1 | Verlängerung PC | extension PC | rallonge PC |
| 13 | 99708801 | 2 | Kopfdichtung | head sealing | joint de tête |
| 12 | 81505701 | 1 | Ventilring | valve ring | collier de soupape |
| 11 | 99924001 | 3 | O-Ring | o-ring | joint torique |
| 10 | 81500501 | 1 | Kopfventil | head valve | valve de têtiere |
| 9 | 99923901 | 1 | O-ring | o-ring | joint torique |
| 8 | 81520501 | 1 | Topfscheibe | washer | disque |
| 7 | 99619802 | 1 | Druckfeder | spring | ressort |
| 6 | 81503201 | 1 | Federlager | spring support | support de ressort |
| 5 | 81500101 | 1 | Kopfplatte | head plate | capuchon |
| 4 | 80700201 | 1 | Schalldämpfer | exhaust silencer | silencieux |
| 3 | 81507201 | 1 | Schalldämpfer Abdeckplatte | cover plate, exhaust silencer | plaque de silencieux |
| 2 | 99303802 | 2 | Zylinderschraube | screw | vis |
| 1 | 81527201 | 2 | Schutz | protective cover | capot de protection |
| Pos. | ET-Nr. | Menge | Beschreibung | description | dénomination |